Pullout Door Mount Braket 150mm Grey

Part Number: 041-VBR100

These door mounting brackets come in a variety of lengths to securely fasten your pantry pullout to your cabinet door.

Finish	Light Grey
Length	100 mm (4 in)
Material	Metal
Suggested for Cabinet (Door) Width	150 mm (6 in)

Product Description

Bracket provides for 6-way door adjustment. We recommend 3 door-mount brackets to secure your frame to door for most tall pantry doors.

Technical Documents

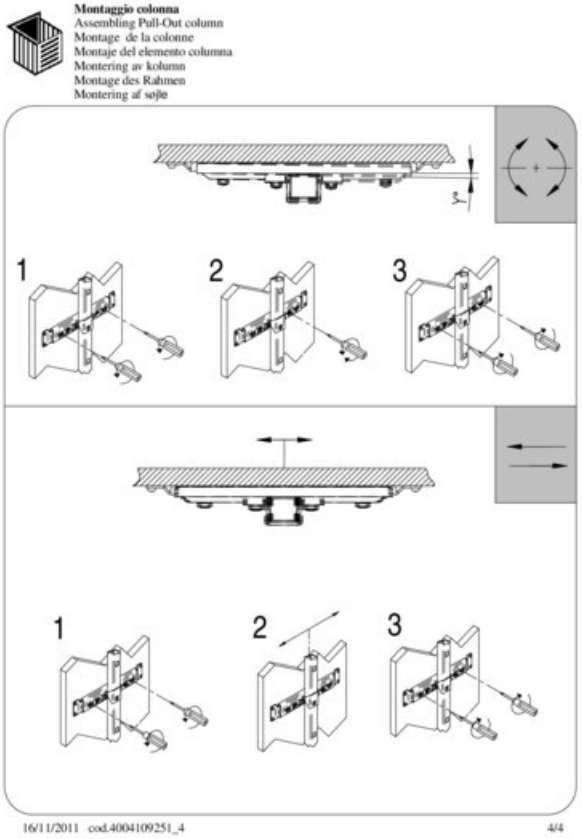

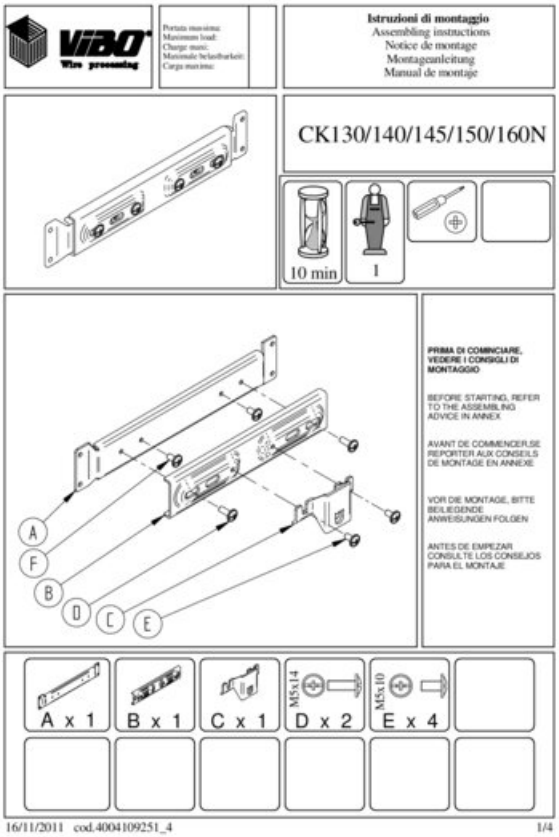

View this product online at https://marathonhardware.com/pd/041-VBR100