VIDEO TUTORIAL

KIMANA

ITALIANA ferramenta

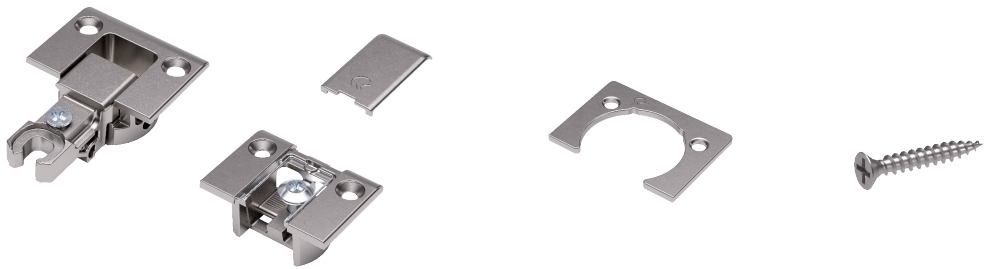

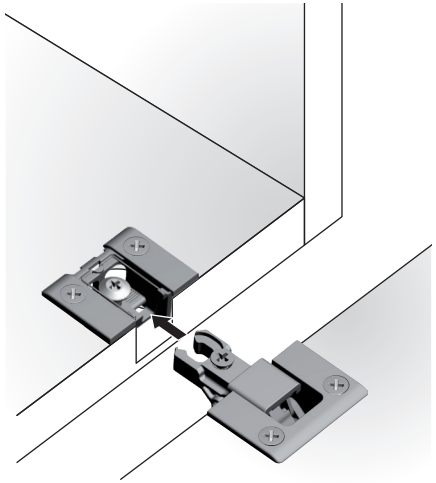

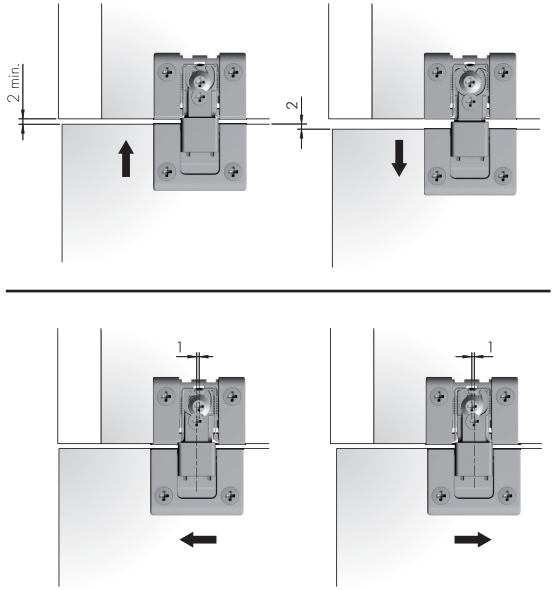

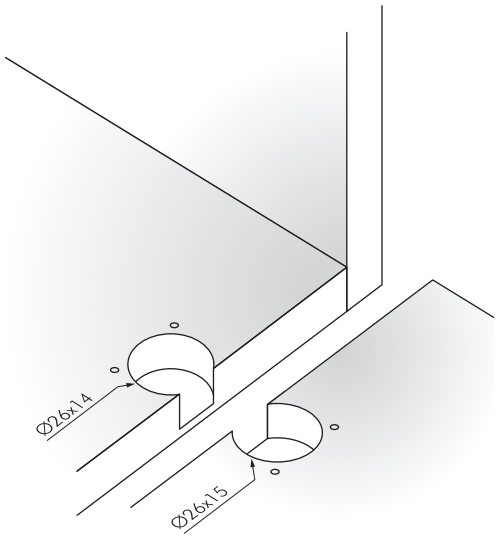

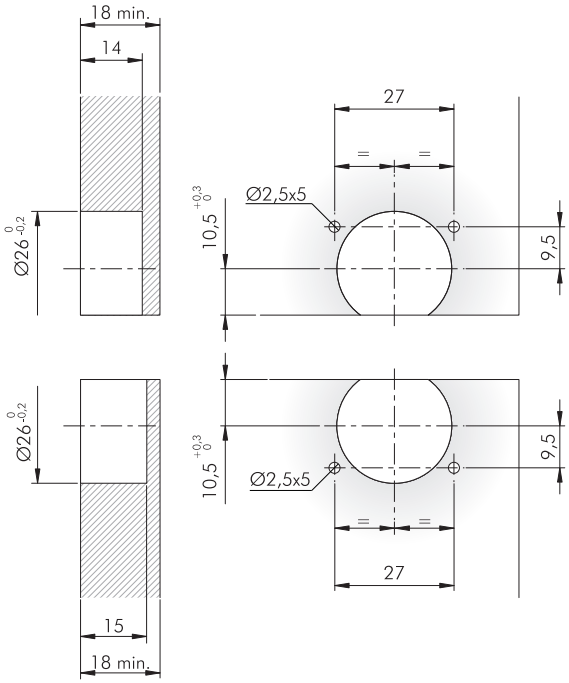

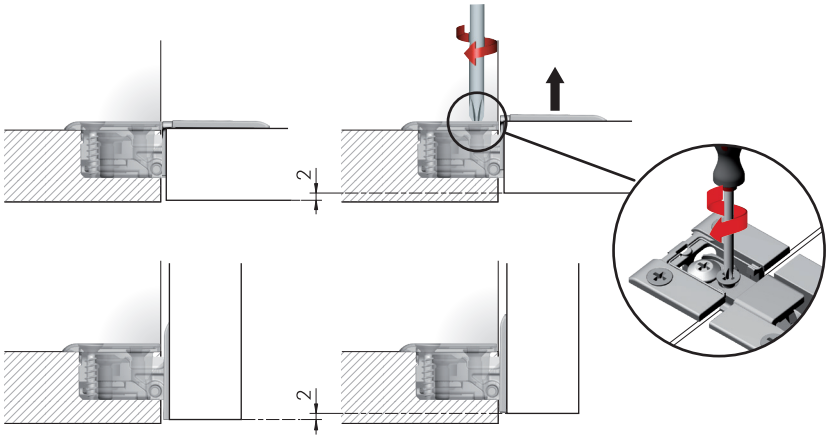

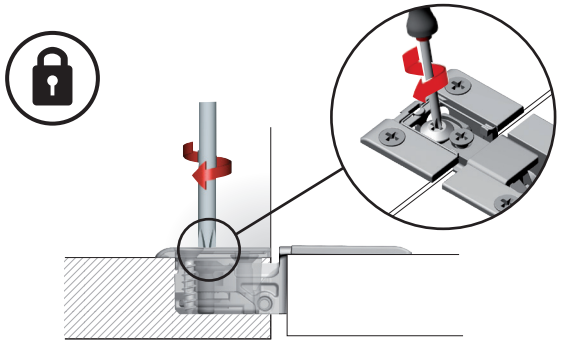

= mm

F100000521 Rev. 0

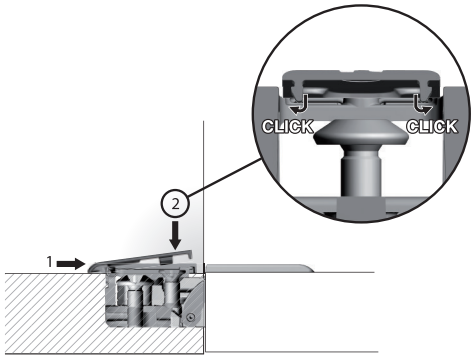
CLICK
CLICK
2
1

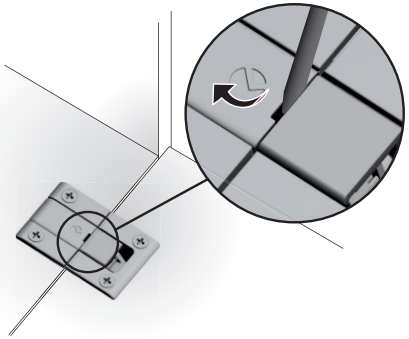

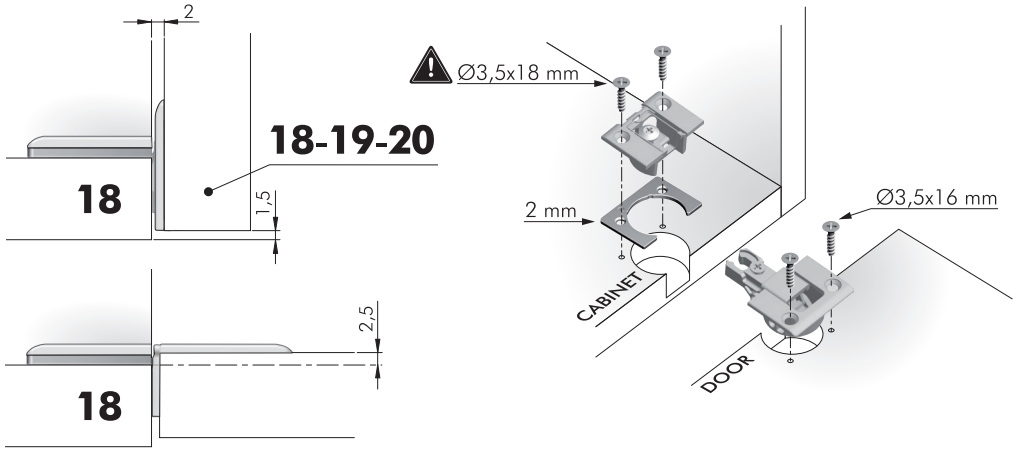
2
18-19-20
18
1,5
2,5
18
Ø3,5x18 mm
2 mm
Ø3,5x16 mm
CABINET
DOOR

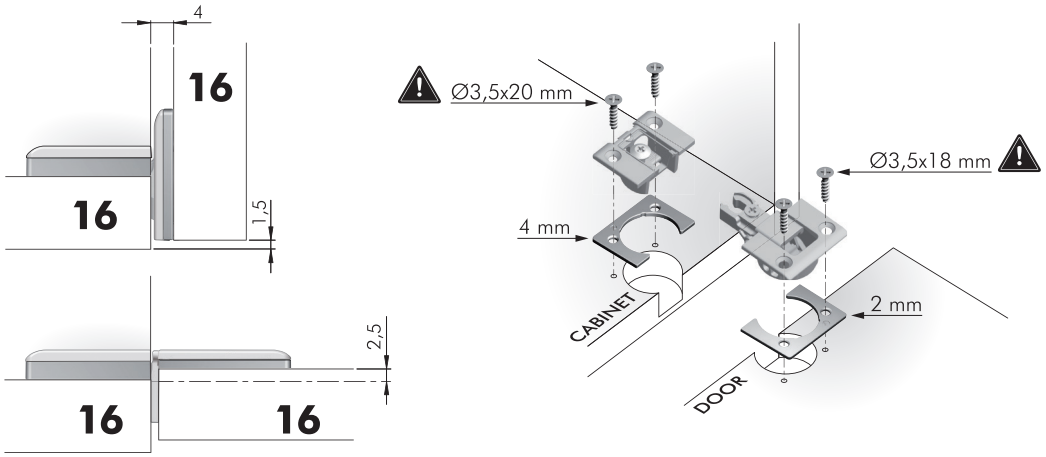
4
16
16
1,5
2,5
16
16
Ø3,5x20 mm
Ø3,5x18 mm
4 mm
2 mm
CABINET
DOOR

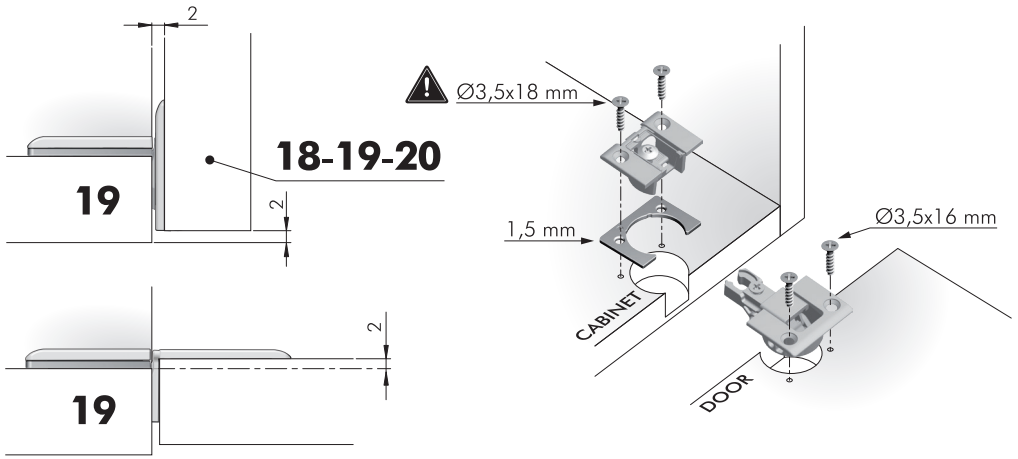
2
18-19-20
19
2
2
19
Ø3,5x18 mm
1,5 mm
Ø3,5x16 mm
CABINET
DOOR

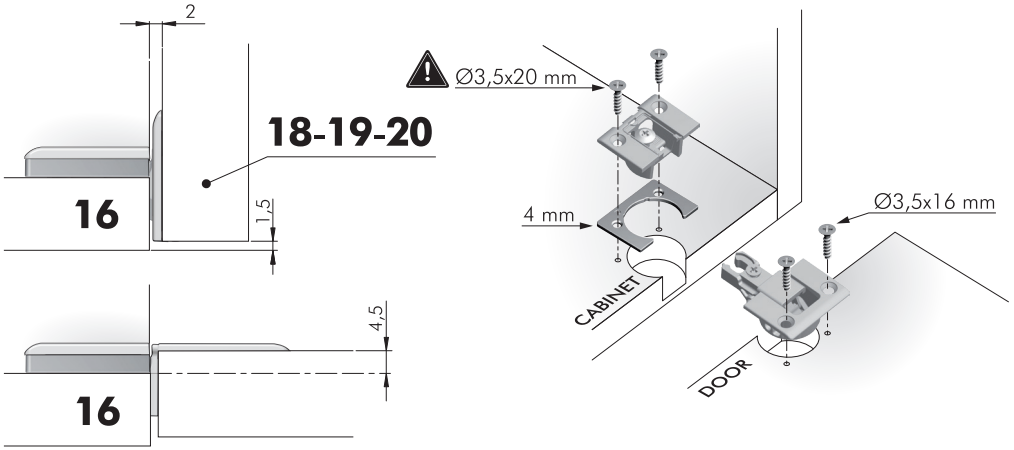
2
18-19-20
16
1,5
4,5
16
Ø3,5x20 mm
4 mm
Ø3,5x16 mm
CABINET
DOOR

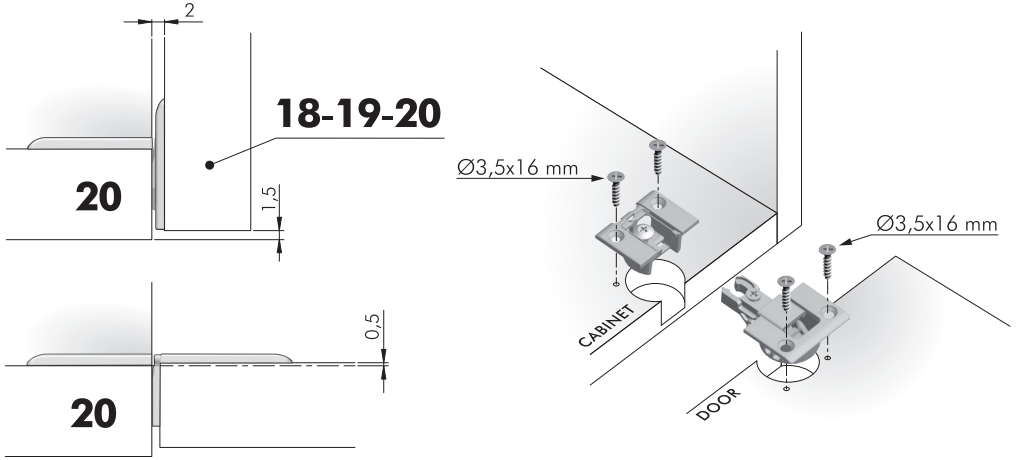
2
18-19-20
20
1,5
0,5
20
Ø3,5x16 mm
Ø3,5x16 mm
CABINET
DOOR